本图纸为昆山福步工业设备有限公司财产，未经本单位许可不得复制或转给第三者。
This drawing is the property of FBU INDUSTRAL EQUIPMENT (KUNSHAN) CO.,LTD.unauthorized disclosure to any third party or duplication is not permitted.

接口说明 Connection	
BI	缓冲液入口
BO	缓冲液冷出口

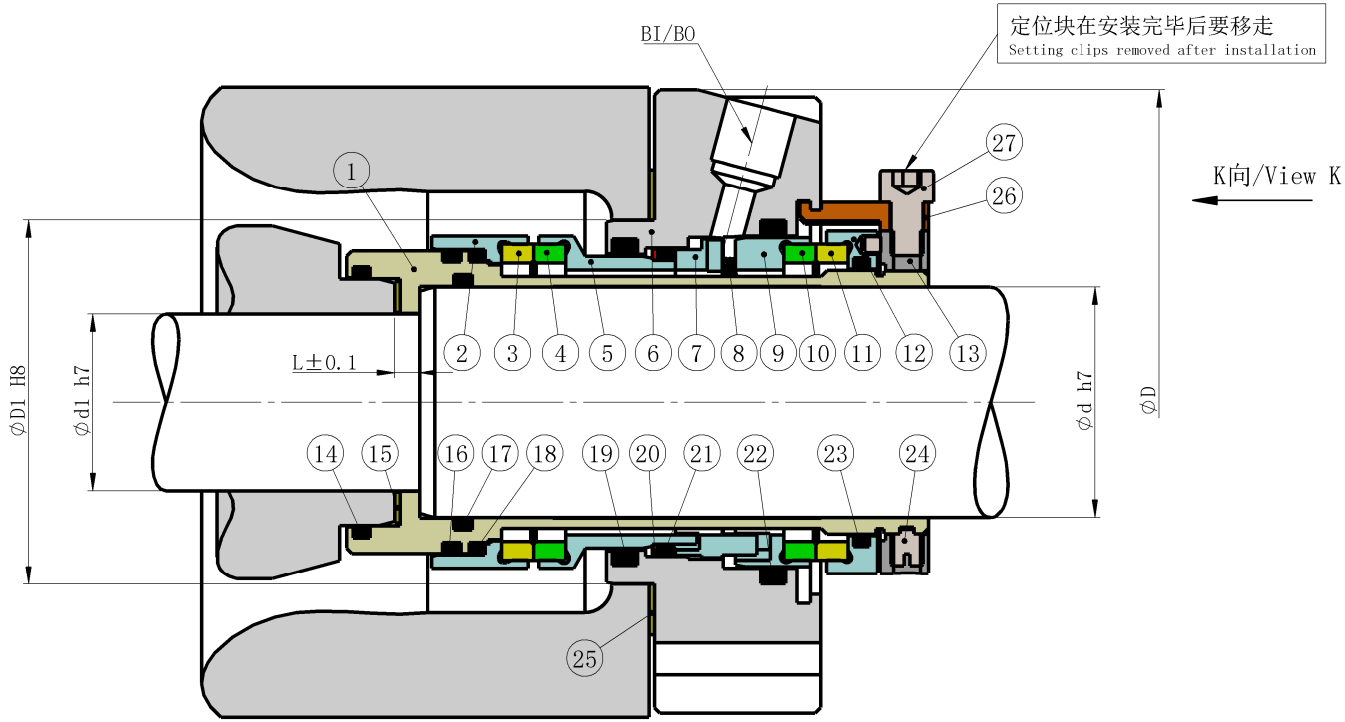

序号 No	零件名称 Description	材料 Material
1	轴套/Shaft Sleeve	316SS不锈钢/Stainless Steel
2	一级动环座/Internal Rotating Seat	316SS不锈钢/Stainless Steel
3	一级动环/Internal Rotary Face	SSIC/RBSIC
4	一级静环/Internal Stationary Face	SSIC/RBSIC
5	一级静环座/Internal Stationary Seat	316SS不锈钢/Stainless Steel
6	压盖/Gland	316SS不锈钢/Stainless Steel
7	弹簧座/Spring Plate	316SS不锈钢/Stainless Steel
8	弹簧/Spring	316SS不锈钢/Stainless Steel
9	二级静环座/External Stationary Seat	316SS不锈钢/Stainless Steel
10	二级静环/External Stationary Face	SSIC/RBSIC
11	二级动环/External Rotary Face	SSIC/RBSIC
12	二级动环座/External Rotary Seat	316SS不锈钢/Stainless Steel
13	定位环/Clamp Ring	316SS不锈钢/Stainless Steel
14	O型圈/O-Ring	EPR/Viton/Aflas/Kalrez
15	垫片/Gasket	PTFE
16	O型圈/O-Ring	EPR/Viton/Aflas/Kalrez
17	O型圈/O-Ring	EPR/Viton/Aflas/Kalrez
18	O型圈/O-Ring	EPR/Viton/Aflas/Kalrez
19	O型圈/O-Ring	EPR/Viton/Aflas/Kalrez
20	挡圈/Drive Ring	316SS不锈钢/Stainless Steel
21	O型圈/O-Ring	EPR/Viton/Aflas/Kalrez
22	O型圈/O-Ring	EPR/Viton/Aflas/Kalrez
23	O型圈/O-Ring	EPR/Viton/Aflas/Kalrez
24	限位螺钉/Anti-tamper Screws	316SS不锈钢/Stainless Steel
25	垫片/Gasket	PTFE
26	定位块/Setting Clips	316SS不锈钢/Stainless Steel
27	定位螺钉/Clip Screw	316SS不锈钢/Stainless Steel

K向/View K

比例不符/NO SCALE

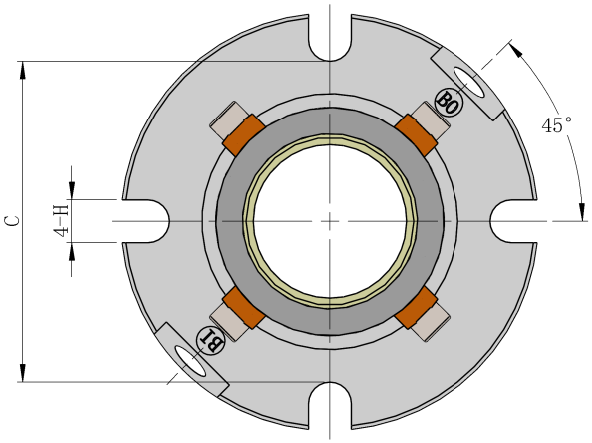

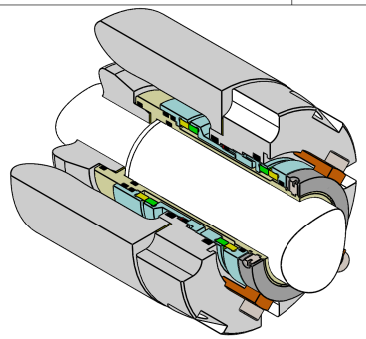

SIZE	33	43
d	33.0	43.0
d1	22.0	33.0
D	98.0	117.0
D1	59.0	68.0
L	4.0	4.7
H	10.0	12.0
C	76.0	90.0

未注公差按照 General tolerance Per ISO 2768-m	名义尺寸 Nominal dimensions [mm]	0.5-6	>6-30	>30-120	>120-400	>400-1000	>1000-2000
	公差 Tolerances [mm]	±0.1	±0.2	±0.3	±0.5	±0.8	±1.2

Format/图幅 DIN EN ISO 216 A3 | 第一视角 Projection Method 1 | 表面粗糙度表示方法符合 Method of indicating surface to ISO1302(μm) | 公差符合 Tolerances according to ISO 2768-m

标记 NO.	处数 QTY.	描述 Description	日期 Date	姓名 Name
1				
2				
3				
4				

昆山福步工业设备有限公司
FBU INDUSTRAL EQUIPMENT (KUNSHAN) CO., LTD.

	日期 Date	姓名 Name
设计 Design	2021/10/19	
校核 Checked		
审核 Approved		
公差带 Tolerance ISO 8015	比例 Scale 1:1	材料标记 Matrial Code

规格型号/TYPE NO.
2234-XXXX(≤43轴径)

机械密封

图号/Drawing NO.

质量/Weight g

版本: Rev. A