本图纸为昆山福步工业设备有限公司财产，未经本单位许可不得复制或转给第三者。
This drawing is the property of FBU INDUSTRAL EQUIPMENT (KUNSHAN) CO.,LTD.unauthorized disclosure to any third party or duplication is not permitted.

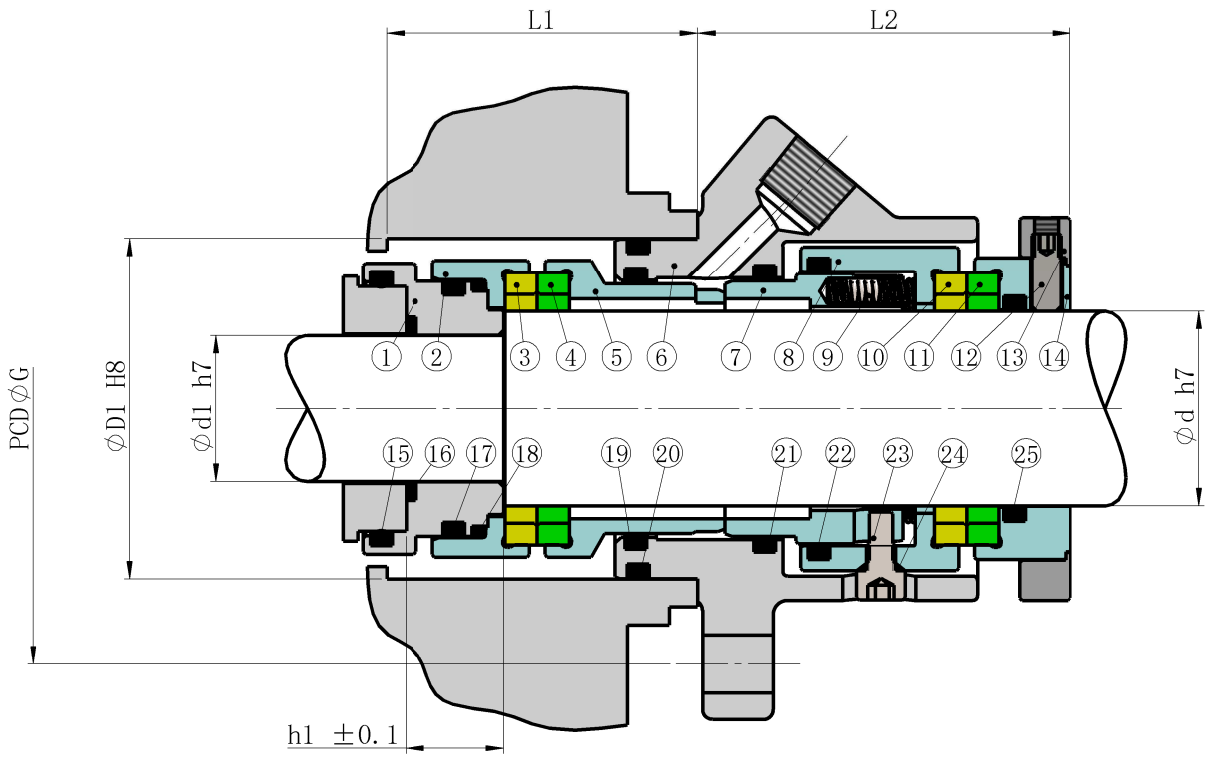

序号 NO.	零件名称 Description	材质 Material
1	尾座/Intermdeiate Sleeve	316SS不锈钢/Stainless Steel
2	一级动环座/Internal Rotary Seat	316SS不锈钢/Stainless Steel
3	一级动环/Internal Rotary Face	SSIC
4	一级静环/Internal Stationary Face	SSIC
5	一级静环座/Internal Stationary Seat	316SS不锈钢/Stainless Steel
7	弹簧座/Internal Spring Plate	316SS不锈钢/Stainless Steel
6	压盖/Gland	316SS不锈钢/Stainless Steel
8	二级静环座/External Stationary Seat	316SS不锈钢/Stainless Steel
9	弹簧/Springs	316SS/Hast.C
10	二级动环/External Rotary Face	SSIC
11	二级静环/External Stationary Face	SSIC
12	紧定螺钉/Setting Clip Screws	316SS不锈钢/Stainless Steel
13	定位环/Clamp Ring	316SS不锈钢/Stainless Steel
14	二级动环座/External Rotary Seat	316SS不锈钢/Stainless Steel
15	O型圈/O-Ring	FKM/EPDM/Aflas/Kalrez
16	O型圈/O-Ring	PTFE
17	O型圈/O-Ring	FKM/EPDM/Aflas/Kalrez
18	O型圈/O-Ring	FKM/EPDM/Aflas/Kalrez
19	O型圈/O-Ring	FKM/EPDM/Aflas/Kalrez
20	O型圈/O-Ring	FKM/EPDM/Aflas/Kalrez
21	O型圈/O-Ring	FKM/EPDM/Aflas/Kalrez
22	O型圈/O-Ring	FKM/EPDM/Aflas/Kalrez
23	驱动螺钉/Drive Screw	316SS不锈钢/Stainless Steel
24	O型圈/O-Ring	FKM/EPDM/Aflas/Kalrez
25	O型圈/O-Ring	FKM/EPDM/Aflas/Kalrez

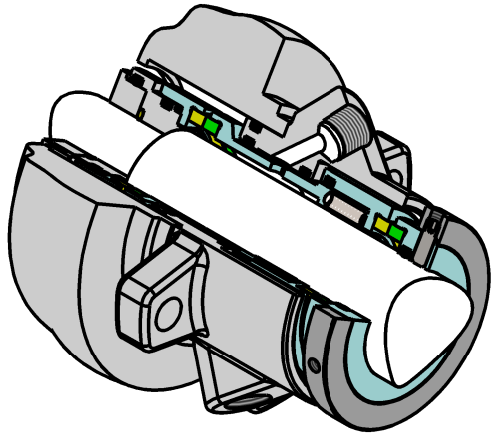

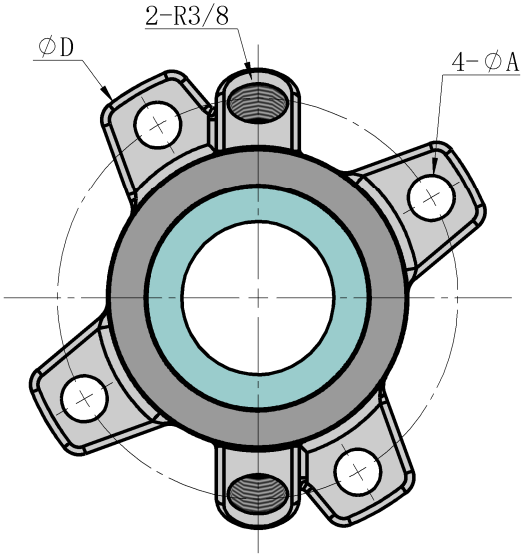

SIZE	30	40	50	60	80	90
d	30	40	50	60	80	90
d1	23	30	40	45	65	75
D1	60	70	85	95	122	132
G	95	105	125	135	170	180
D	115	127	150	160	200	210
L1	64	64	78	78	102	102
L2	64.5	76	66	107	102	102
h1	20	20	25	25	30	30
A	12	12	14	14	17.5	17.5

未注公差按照 General tolerance Per ISO 2768-m	名义尺寸 [mm] Nominal dimensions	0.5-6	>6-30	>30-120	>120-400	>400-1000	>1000-2000
	公差 Tolerances [mm]	±0.1	±0.2	±0.3	±0.5	±0.8	±1.2

Format/图幅 DIN EN ISO 216 A3 | 第一视角 Projection Method 1 | 表面粗糙度表示方法符合 Method of indicating surface to ISO1302(μm) | 公差符合 Tolerances according to ISO 2768-m

标记 NO.	处数 QTY	描述 Description	日期 Date	姓名 Name
1				
2				
3				
4				

FBU 昆山福步工业设备有限公司
FBU INDUSTRAL EQUIPMENT (KUNSHAN) CO., LTD.

	日期 Date	姓名 Name
设计 Design	2022/4/7	丁霞
校核 Checked		
审核 Approved		
公差等 Tolerance ISO 8015	比例 Scale 1:1	材料标记 Matrial Code

规格型号/TYPE NO. 2220-XXXX

机械密封/Mech. seal

质量/Weight 3705.87 g

图号/Drawing NO.

版本: Rev. A